REC 16-217

RECEIVED
FEB 01 2016
NH PUBLIC UTILITIES COMMISSION

State of New Hampshire
Public Utilities Commission

21 S. Fruit Street, Suite 10, Concord, NH 03301-2429

DRAFT

APPLICATION FORM FOR

RENEWABLE ENERGY SOURCE ELIGIBILITY FOR CLASS I THERMAL SOURCES WITH RENEWABLE THERMAL ENERGY CAPACITY GREATER THAN 150,000 BTU/HR

Pursuant to New Hampshire Administrative Code PUC 2500 Rules

- Please submit one (1) original and two (2) paper copies of the completed application and cover letter* to:

Debra A. Howland
Executive Director
New Hampshire Public Utilities Commission
21 South Fruit Street, Suite 10
Concord, NH 03301-2429

- Send an electronic version of the completed application and the cover letter electronically to executive.director@puc.nh.gov.

* The cover letter must include complete contact information and identify the renewable energy class for which the applicant seeks eligibility. Pursuant to PUC 2505.01, the Commission is required to render a decision on an application within 45 days of receiving a completed application.

If you have any questions please contact Barbara Bernstein at (603) 271-6011 or Barbara.Bernstein@puc.nh.gov.

Only facilities that began operation after January 1, 2013 are eligible.

Is this facility part of a Commission approved aggregation?
Yes ____ No x
Aggregator's Company Name: _____
Aggregator Contact Information: _____

Contents

Part 1. General Application Information 3
Part 2. Technology Specific Data 4
Part 3. Metering and Measurement of Thermal Energy and REC Calculations 5
Part 4. Affidavits 8
Application Checklist 9
Appendix A. Excerpt from Puc 2500 – Certain Thermal Metering Provisions 10

Attachment Labeling Instructions

Please label all attachments by Part and Question number to which they apply (e.g. Part 3-7). For electronic submission, name each attachment file using the Owner Name and Part and Question number (e.g. Pearson Part 3-7).

Part 1. General Application Information

Please provide the following information:

Applicant

Name: Whelen Engineering

Mailing Address: 99 Ceda Road

Town/City: Charlestown State: NH Zip Code: 03603

Primary Contact: Matt Dolloph

Telephone: 603-283-4046 Cell:

Email Address: mdolloph@whelen.com

Facility

Name: Whelen Engineering Building 1

Physical Address: 99 Ceda Road

Town/City: Charlestown State: NH Zip Code: 03603

If the facility does not have a physical address, the Latitude: _____ & Longitude _____

Installer

Name: Froling Energy

Installer License Number:

Mailing Address: 590 Hancock Road

Town/City: Peterborough State: NH Zip Code: 03458

Primary Contact: Mark Froling

Telephone: 603-924-1001 x1 Cell: 603-520-6272

Email Address: Mark@FrolingEnergy.com

If the equipment was installed by the facility owner, check here: ☐

Facility Operator

If the facility operator is different from the owner, please provide the following:

Name:

Facility Operator Telephone Number:

Independent Monitor

Name: Adam Kohler

Mailing Address: 306 Hall Road

Town/City: Barrington State: NH Zip Code: 03825

Primary Contact: Adam Kohler

Telephone: Cell: 603-969-6459

Email Address:

NEPOOL/GIS Asset ID and Facility Code

In order to qualify your facility's thermal energy production for RECs, you must register with the NEPOOL – GIS. Contact information for the GIS administrator follows:

James Webb
Registry Administrator, APX Environmental Markets
224 Airport Parkway, Suite 600, San Jose, CA 95110
Office: 408.517.2174
jwebb@apx.com

Mr. Webb will assist you in obtaining a GIS facility code and an ISO-New England asset ID number.

GIS Facility Code # NON60530 Asset ID # NON60530

1. Has the facility been certified under another non-federal jurisdiction's renewable portfolio standards?

Yes [ ] No [X]

If you selected yes, *please provide proof of certification in the form of an attached document as Attachment 1-1.*

2. Attach any supplementary documentation that will help in classification of the facility as Attachment 1-9

Part 2. Technology Specific Data

All Technologies

Fuel type (solar, geothermal, or biomass): Biomass (wood)

Rated Thermal Capacity (Btu/hr): 2,000,000

Date of initial operation using renewable fuels: 10/1/2013

Biomass

If a thermal biomass facility, provide proof of New Hampshire Department of Environmental Services approval that the facility meets the emissions requirements set forth in Puc 2500, as Attachment 2-1.

Solar Thermal

If a solar thermal facility, please provide the Solar Rating and Certification Corporation rating based on Mildly Cloudy C (kBtu/day): _____

Geothermal

If a geothermal facility, please provide the following:

The coefficient of performance (COP): _____

The energy efficiency ratio of the system: _____

Part 3. Metering and Measurement of Thermal Energy and REC Calculations

This section deals with the thermal metering system including methods for calculation and reporting useful thermal energy. **A copy of PUC 2506.04 of the RPS rules is included as Appendix A.**

Using the table below, identify the thermal metering system or custom components (e.g., heat meters, flow meters, pressure and temperature sensors) used to measure the useful thermal energy and enter the accuracy of measurement for the entire system:

System or Component	Product name	Product Manufacturer	Model No.
BTU Meter	ClarkSonic	Clark Solutions	CSEMB20
Temperature Transmitter	Series 440	Pyromation	440-00
Total System Accuracy (Percent)	99%		

Attach component specification sheets (Accuracy, Operating Ranges) as Attachment 3-1. [X]

Attach a simple schematic identifying the location of each sensor that is part of the metering system as Attachment 3-2. [X]

Check the applicable standard for meter accuracy prescribed in Puc 2506.04 among the six choices below (compliance with Puc 2506.04 shall be certified by a professional engineer licensed by the state of New Hampshire and in good standing):

If the facility is a large thermal source using a liquid or air based system, check the method that applies:

A. Installation and use of heat meters capable of meeting the accuracy provisions of European Standard EN 1434 published by CEN, the European Committee for Standardization. The heat meter shall have the highest Class flow meter that will cover the design flow range at the point of measurement and a temperature sensor pair of Class 5K or lower. [X]

B. Installation and use of meters that do not comply with European Standard EN 1434, provided that the manufacturers' guaranteed accuracy of the meters is ±5.0% or better, [ ]

C. Use of an alternative metering method approved pursuant to Puc 2506.06. [ ]

If the facility is a large thermal source using a steam-based system, check the method that applies:

D. Installation and use of meters with accuracy of ±3.0% or better. [ ]

E. Installation and use of meters with system accuracy that do not meet D but are ±5% or better. [ ]

F. Use of an alternative metering method approved pursuant to Puc 2506.06. [ ]

Please summarize the manufacturer's recommended methods and frequency for metering system calibration and provide reference for source document (e.g. owners/operators manual):

Calibration checks to be performed periodically to verify the system is measuring within tolerance.

REC Calculation Discount factor for meter accuracy (Enter 0 if no discount is required): 1 %

If the meters used to measure useful thermal energy comply with the accuracy of the European Standard EN 1434 for liquid systems or use of meters with accuracy of ±3.0% or better for steam systems enter zero, for all other systems enter the sum total of the manufacturer's guaranteed accuracy of the meters used or the accuracy of the alternative method approved pursuant to Puc 2506.06.

REC Calculation Discount factor for operating energy and thermal energy losses: 2 %

Check the method used for determining the operating energy and thermal loss factor among the choices below:

Default Factor [ ]

- For sources using solar thermal technology, the discount factor shall be 3.0% of the useful thermal energy produced;
- For sources using geothermal technology, the discount factor shall be 3.6% of the useful thermal energy produced;
- For sources using thermal biomass renewable energy technology, the discount factor shall be

2.0% of the useful thermal energy produced.

Actual Metering [X]

- Include a simple schematic identifying the operating energy and thermal energy losses and placement of the meters.

Interim Alternative Metering Method

Until such time as the Puc 2500 rule is finalized applicants may utilize an alternative method as described in the draft rule 2505.02(e)(2):

> *In lieu of the information required by Puc 2505.02 (d) (11) through (13), a thermal source may submit a detailed explanation of the methodology used to measure and calculate thermal energy and an attestation by a professional engineer that is licensed in New Hampshire and in good standing that the methodology for measuring useful thermal energy and calculating certificates is sound.*

Application Checklist				
Application Section		Item Description	Attachment Required	Check box
Part 1-1		Applicant Information		☐
Part 1-2		Facility Location Information		☐
Part 1-3		Installer Contact Information		☐
Part 1-4		Equipment Seller Information		☐
Part 1-5		Facility Monitor Information		☐
Part 1-6		Regulatory Approvals for REC Requirements	Yes	☐
Part 1-7		Other REC Certifications		☐
Part 1-8		Facility Output Information		☐
Part 1-9		Facility Operator Information		☐
Part 1-10		Additional Facility Classification Information		☐
Part 1-11		Attestation that Building Codes are Met		☐
Part 2-1		Rated Thermal Capacity		☐
Part 2-2a		Thermal Biomass Facility, 3-99 MMBTu/hour Output		☐
Part 2-2b		Thermal Biomass Facility, 100+ MMBTu/hour Output		☐
Part 2-3		Solar Thermal Facility Solar Rating and Certification Corporation Rating		☐
Part 2-4a		Geothermal Facility Coefficient of Performance		☐
Part 2-4b		Geothermal Facility Energy Efficiency Ratio		☐
Part 3-1		Equipment and Meter Description		☐
Part 3-2		Recommended Methods for Meter Calibration		☐
Part 3-3		Attestation that Meters meet PUC 2506 Requirements		☐
Part 3-4		Guaranteed Accuracy of Meters		☐
Part 3-5a		Small Thermal Source- Calculating Useful Thermal Out		☐
Part 3-5b		Large Thermal Source- Calculating Useful Thermal Out		☐
Part 3-6		Meter Accuracy Discount Factor		☐
Part 3-7a		PUC 2506 Operating Energy and Thermal Loss Discount Factor		☐
Part 3-7b		Determining Operating Energy and Thermal Loss Discount Factor		☐
Part 4-1		Owner Affidavit		☐
Part 4-2		Professional Engineer Affidavit		☐

Part 4. Affidavits

Owners Affidavit

The following affidavit must be completed by the owner attesting to the accuracy of the contents of the application pursuant to PUC 2505.02 (b) (14).

AFFIDAVIT

I, Brian Boardman have reviewed the contents of this application and attest that it is accurate and is signed under the pains and penalties of perjury.

Applicant's Signature _____ Date 1-4-16

Applicant's Printed Name Brian Boardman

Subscribed and sworn before me this 4th Day of January (month) in the year 2016

County of Sullivan State of NH

Jean Y. Wetherby

Notary Public/Justice of the Peace Seal

My Commission Expires _____

JEANY. WETHERBY MY COMMISSION EXPIRES AUG. 8, 2017 NOTARY PUBLIC NEW HAMPSHIRE

NH Professional Engineer Affidavit

AFFIDAVIT

I, Adam Kohler attest that this facility meets the requirements of the thermal REC eligibility requirements of Puc 2500, including the thermal metering and measurement methodologies and standards and REC calculation methodologies.

Professional Engineer's Signature _____ Date 1/2/16

Professional Engineer's Printed Name Adam Kohler

NH Professional Engineer License Number 12681

PE Stamp

STATE OF NEW HAMPSHIRE ADAM S. KOHLER No. 12681 LICENSED PROFESSIONAL ENGINEER

Application Checklist				
Application Section		Item Description	Attachment Required	Check box
Part 1-1		Applicant Information		☐
Part 1-2		Facility Location Information		☐
Part 1-3		Installer Contact Information		☐
Part 1-4		Equipment Seller Information		☐
Part 1-5		Facility Monitor Information		☐
Part 1-6		Regulatory Approvals for REC Requirements	Yes	☐
Part 1-7		Other REC Certifications		☐
Part 1-8		Facility Output Information		☐
Part 1-9		Facility Operator Information		☐
Part 1-10		Additional Facility Classification Information		☐
Part 1-11		Attestation that Building Codes are Met		☐
Part 2-1		Rated Thermal Capacity		☐
Part 2-2a		Thermal Biomass Facility, 3-99 MMBTu/hour Output		☐
Part 2-2b		Thermal Biomass Facility, 100+ MMBTu/hour Output		☐
Part 2-3		Solar Thermal Facility Solar Rating and Certification Corporation Rating		☐
Part 2-4a		Geothermal Facility Coefficient of Performance		☐
Part 2-4b		Geothermal Facility Energy Efficiency Ratio		☐
Part 3-1		Equipment and Meter Description		☐
Part 3-2		Recommended Methods for Meter Calibration		☐
Part 3-3		Attestation that Meters meet PUC 2506 Requirements		☐
Part 3-4		Guaranteed Accuracy of Meters		☐
Part 3-5a		Small Thermal Source- Calculating Useful Thermal Out		☐
Part 3-5b		Large Thermal Source- Calculating Useful Thermal Out		☐
Part 3-6		Meter Accuracy Discount Factor		☐
Part 3-7a		PUC 2506 Operating Energy and Thermal Loss Discount Factor		☐
Part 3-7b		Determining Operating Energy and Thermal Loss Discount Factor		☐
Part 4-1		Owner Affidavit		☐
Part 4-2		Professional Engineer Affidavit		☐

Appendix A. Excerpt from Puc 2500 – Certain Thermal Metering Provisions

For complete rules and requirements related to the RPS and REC eligibility, please refer to Puc 2500.

Puc 2506.04 Metering of Sources that Produce Useful Thermal Energy

(a) Sources producing useful thermal energy shall comply with this part in metering production of useful thermal energy.

(b) Sources shall retain an independent monitor to verify the useful thermal energy produced.

(c) Sources shall take data readings for the measurement of useful thermal energy at least every hour. The useful thermal energy produced shall be totaled for each 24 hour period, each monthly period, and each quarter.

(d) Sources shall install meters to measure thermal energy output in compliance with the manufacturer's recommendations and as noted in this part.

(e) Large thermal sources using a liquid or air based system shall measure the useful thermal energy produced using one of the following methods:

(1) Installation and use of heat meters with an accuracy that complies with European Standard EN 1434 published by CEN, the European Committee for Standardization, and that complies with paragraph (k), (l) or (m). The heat meter shall have the highest Class flow meter that will cover the design flow range at the point of measurement and a temperature sensor pair of Class 5K or lower. Compliance shall be certified by a professional engineer licensed by the state of New Hampshire and in good standing;

(2) Installation and use of meters that do not comply with subparagraph (e) (1), provided that the manufacturers' guaranteed accuracy of the meters is ±5.0% or better, and provided that a professional engineer licensed by the state of New Hampshire and in good standing certifies that the meters were installed and operate according to the manufacturers' specifications and in accordance with paragraph (k), (l) or (m); or

(3) Use of an alternative metering method approved pursuant to Puc 2506.06, provided that the accuracy of any such method is ±5.0% or better, and provided that a professional engineer licensed by the state of New Hampshire and in good standing certifies that the source implemented the alternative method as approved by the commission and certifies that the alternative method achieves the stated accuracy of ±5.0% or better.

(f) Large thermal sources using a steam-based system shall measure the useful thermal energy produced using one of the following methods:

(1) Installation and use of meters with accuracy of ±3.0% or better, which compliance shall be certified by a professional engineer licensed by the state of New Hampshire and in good standing and in accordance with paragraph (m);

(2) Installation and use of meters that do not comply with the accuracy of subparagraph (f) (1), provided that the manufacturer's guaranteed accuracy of the meters is ±5.0% or better, and provided that a professional engineer licensed by the state of New Hampshire and in good standing certifies that the meters were installed and operate according to the manufacturer's specifications and in accordance with paragraph (m); or

(3) Use of an alternative metering method approved pursuant to this section, provided that the accuracy of any such method is ±5.0% or better, and provided that a professional engineer licensed by the state of New Hampshire and in good standing certifies that the source implemented the alternative method as approved by the commission and certifies that the alternative method achieves the stated accuracy of ±5.0% or better.

(g) Small thermal sources shall measure useful thermal energy produced using one of the following methods:

(1) For any small thermal sources, the methods described in paragraphs (e) or (f);

(2) For small thermal sources using solar thermal technologies, the method described in paragraph (h);

(3) For small thermal sources using geothermal technologies, the method described in paragraph (i); or

(4) For small thermal sources using thermal biomass technologies, the method described in paragraph (j).

(h) Calculation of useful thermal energy produced by small thermal sources using solar technologies.

(1) "Q" means thermal energy generated, stated in Btu's.

(2) "R" means the Solar Rating and Certification Corporation (SRCC) OG100 rating on Mildly Cloudy C Conditions, stated in thousands of Btu's per day.

(3) "L" means the orientation and shading losses calculated based on solar models such as Solar Pathfinder, T-sol, Solmetric, or another model approved by the Commission, converted from a percentage to the equivalent number less than 1.

(4) "t" means the total operating run time of the circulating pump as metered, stated in hours.

(5) "h" means 11 hours per day to convert the SRCC OG100 rating to an hourly basis (conversion factor).

(6) To calculate Q, the useful thermal energy produced by small thermal sources using solar technologies, the source shall compute the product of R, t and the result of 1 minus L, and divide the result by the product of h and 1,000, as in the formula below:

$$Q = [R * t * (1 - L)] / (h * 1{,}000)$$

(i) Calculation of useful thermal energy produced by small thermal sources using geothermal technologies.

(1) "Q" means thermal energy generated, stated in Btu's.

(2) "HC" means the Air Conditioning, Heating and Refrigeration Institute (AHRI) certified heating capacity at part load, stated in Btu's per hour.

(3) "COP" means the AHRI Certified Coefficient of Performance.

(4) "t" means total operating run time of the pump when the entering water temperature is greater than the leaving water temperature, stated in hours.

(5) Small thermal sources using geothermal technologies may calculate Q, the useful thermal energy produced, by multiplying HC by the difference between COP and 1, multiplying the result by t, and dividing the result by COP, as in the formula below:

$$Q = [HC * (COP - 1) * t] / COP$$

(j) Calculation of useful thermal energy produced by small thermal sources using thermal biomass renewable energy technologies.

(1) "Q" means the thermal energy generated, stated in Btu's.

(2) "D" means the default pellet density, which shall be 0.0231 pounds per cubic inch.

(3) "R" means the auger revolutions per hour.

(4) "V" means auger feed volume, stated in cubic inches per auger revolution. Small thermal sources shall assume that V equals one of the following:

a. 5 cubic inches per revolution for augers with a 2" inside diameter;

b. 20 cubic inches per revolution for augers with a 3" inside diameter;

c. 50 cubic inches per revolution for augers with a 4" inside diameter;

d. 95 cubic inches per revolution for augers with a 5" inside diameter; or

e. 150 cubic inches per revolution for augers with a 6" inside diameter.

(5) "EC" means the default energy content of pellet fuel, which shall be 7870 Btu per pound.

(6) "ASE" means the default thermal efficiency expressed as a percentage based on the manufacturer's warranty of average seasonal thermal efficiency, or based on a default thermal efficiency of 65%.

(7) "t" means the total auger run time in hours as metered.

(8) The estimated amount of fuel burned (the product of D, R, V and t) shall be verified by the fuel purchase records and fuel inventory.

(9) Small thermal sources using thermal biomass renewable energy technologies with wood pellets as the fuel source may calculate Q, the useful thermal energy produced, by computing the product of D, R, V, EC, ASE and t, as in the formula below:

$$Q = (D * R * V * EC * ASE * t)$$

(k) Thermal sources using solar thermal technologies.

(1) "Q_g" means the heat generated in the collector loop, stated in Btu's.

(2) "dm/dt" means the mass flow of the collector working fluid measured near the inlet to the solar storage tank, stated in pounds per hour.

(3) "c_p" means the specific heat of the collector fluid, stated in Btu's per pound (mass), degrees Fahrenheit (BTU/lbm-°F).

(4) "Ti" means the collector loop inlet temperature measured near the outlet of the solar storage tank, stated in degrees Fahrenheit.

(5) "To" means the collector loop outlet temperature measured near the inlet to the solar storage tank, stated in degrees Fahrenheit.

(6) "t" means the frequency at which data readings are recorded, stated in hours.

(7) Meter sensors shall be installed on the collector loop as close to the water storage tank as practical and in accordance with the meter manufacturer's guidance.

(8) Thermal sources using solar thermal technologies shall calculate Q, the useful thermal energy produced, by calculating the product of dm/dt, c_p, the difference between To and Ti, and t, as stated in the formula below:

$$Q_g = (dm/dt)*c_p *(To - Ti) * t$$

(l) Thermal sources using geothermal technologies.

(1) "Q_g" means heat generated in the ground loop, stated in BTU's.

(2) "dm/dt" means mass flow measured near the outlet of the ground loop, stated in pounds per hour.

(3) "c_p" means specific heat of the working fluid, stated in BTU/lbm-°F.

(4) "t" means the frequency at which data readings are recorded, stated in hours.

(5) "Ti" means ground loop inlet temperature measured at the inlet to the ground loop, stated in degrees Fahrenheit.

(6) "To" means ground loop outlet temperature measured at the outlet from the ground loop, stated in degrees Fahrenheit.

(7) Bleed points, supplemental boilers and cooling towers shall be excluded from the calculation.

(8) Meter sensors shall be installed on the ground loop as close to the ground loop inlet and outlet as practical and in accordance with the manufacturer's recommendation.

(9) Thermal sources using geothermal technologies shall calculate Q, the useful thermal energy produced, by calculating the product of dm/dt, c_p, the difference between To and Ti, and t, as stated in the formula below:

$$Q_g = (dm/dt) * c_p * (To - Ti) * t$$

(m) Thermal sources using thermal biomass renewable energy technologies.

(1) "Q_g" means the thermal energy generated from biomass, stated in Btu.

(2) "dm_{out}/dt" means mass flow metered upstream of distribution and downstream of parasitic loads, stated in pounds per hour.

(3) "h_{out}" means the specific enthalpy at the metering point determined by temperature data and, for superheated steam, by pressure data, stated in Btu's per pound.

(4) "dm_{in}/dt" means mass flow of water into the feedwater or condensate pumps, stated in pounds per hour.

(5) "h_{in}" means the specific enthalpy at the metering point which will be a function of the enthalpy of incoming condensate and make-up water prior to the first condensate or feedwater pumps, stated in Btu's per pound.

(6) "t" means the frequency at which data readings are recorded, stated in hours.

(7) All metering systems shall measure boiler feedwater flow, pressure and temperature as close to the first feedwater pump inlet as possible, thereby excluding the deaerator.

(8) Metering for systems that produce hot water shall include sensors for temperature and hot water mass flow placed as close as possible to the boiler hot water distribution header inlet.

(9) Metering for systems that produce steam shall include sensors for temperature, pressure and steam flow placed as close as possible to the steam distribution header inlet and thereby prior to distribution to process loads.

(10) For saturated steam systems, pressure and temperature shall be measured to verify the absence of superheat at the measurement point.

(11) For superheated systems, both pressure and temperature measurements shall be required.

(12) Regardless of phase, the enthalpy under the measured conditions shall either be calculated using International Association for the Properties of Water and Steam (IAPWS) Industrial Formulation 1997 (IF97) formulas or taken from IAPWS or derivative steam tables.

(13) Thermal sources using thermal biomass renewable energy technologies shall calculate Q, the useful thermal energy produced, by calculating the product of dm_{out}/dt, (h_{out}), and t, and subtract from that number the product of dm_{in}/dt, h_{in} and t, as stated in the formula below:

$$Q_g = [dm_{out}/dt * (h_{out}) * t] - [dm_{in}/dt * (h_{in}) * t]$$

Puc 2506.05 Calculation of Certificates for Production of Useful Thermal Energy

(a) Sources producing useful thermal energy, the independent monitor or the designated representative shall report to GIS the useful thermal energy produced and the amount of RECs calculated pursuant to this part, as verified by the source's independent monitor.

(b) Useful thermal energy shall be expressed and reported in megawatt-hours where each 3,412,000 Btu's of useful thermal energy is equivalent to one megawatt-hour.

(c) Small thermal sources shall receive certificates based on the useful thermal energy produced as metered pursuant to Puc 2506.04(e) or (f) and discounted, as applicable, by the discount for meter accuracy pursuant to paragraph (e) or as calculated pursuant to Puc 2506.04(h), (i), or (j).

(d) Large thermal sources shall receive certificates based on the useful thermal energy calculated pursuant to Puc 2506.04(e) or (f), discounted by the sum of the percentage discount for meter accuracy pursuant to paragraph (e) and the percentage discount for operating energy and thermal storage losses, or parasitic load, pursuant to paragraph (f).

(e) The discount factor for meter accuracy referenced in paragraphs (c) and (d) shall be one of the following:

(1) If the meters used to measure useful thermal energy output comply with the accuracy of the European Standard EN 1434 as provided in Puc 2506.04(e)(1) or the accuracy pursuant to Puc 2506.04(f)(1), there shall be no meter accuracy discount; or

(2) If the meters used to measure useful thermal energy output do not comply with the accuracy of the European Standard EN 1434 as provided in Puc 2506.04(e)(1) or the accuracy pursuant to Puc 2506.04(f)(1), the applicable meter discount shall be the manufacturer's guaranteed accuracy of the meters used or the accuracy of the alternative method approved pursuant to Puc 2506.06.

(f) The discount factor for large thermal sources for parasitic load referenced in paragraph (d) shall be one of the following:

(1) For sources using solar thermal technology, the discount factor shall be 3.0% of the useful thermal energy produced as measured pursuant to Puc 2506.04;

(2) For sources using geothermal technology, the discount factor shall be 3.6% of the useful thermal energy produced as measured pursuant to Puc 2506.04;

(3) For sources using thermal biomass renewable energy technology, the discount factor shall be 2.0% of the useful thermal energy produced as measured pursuant to Puc 2506.04; or

(4) The discount factor shall be the source's actual metering of the parasitic load.

Puc 2506.06 Request for Alternative Method for Measuring Thermal Energy

(a) A source shall not use an alternative metering method until that alternative method is approved by the commission.

(b) A source seeking approval of an alternative method shall submit an application to the commission that includes the following information:

(1) The name, mailing address, daytime telephone number, and e-mail address of the person requesting approval for the alternative method;

(2) The name and location of the source at which the alternative method will be implemented;

(3) A description of the metering method otherwise required by these rules and the reasons it cannot be used with the applicant's facility;

(4) A description of the proposed alternative method;

(5) Technical data and information demonstrating that the accuracy of the method otherwise required by these rules will be substantially achieved by the proposed alternative method (such data and information may include third party data such as product test results from independent test laboratories, performance data based on nationally recognized product test/certification programs, published resource data for use in calculations, and examples of the use of the method by other organizations for similar purposes); and

(6) Certification by a professional engineer licensed by the state of New Hampshire and in good standing of the meter accuracy rate that will be achieved by the alternative metering method and that the proposed alternative method is technologically sound.

(a) Electricity generation in megawatt-hours and useful thermal energy expressed in megawatt-hours shall be measured and verified in accordance with ISO-NE and GIS operating rules and this Part.

(c) The commission shall approve an alternative metering method that satisfies the requirements of paragraph (b).

Whelen 1 – Attachment 2-1

The State of New Hampshire
DEPARTMENT OF ENVIRONMENTAL SERVICES

Thomas S. Burack, Commissioner

December 28, 2015

Mr. Mark Froling
Froling Energy
590 Hancock Road
Peterborough, NH 03458

Re: Recommended Certification as a Class I Thermal Renewable Energy Source
Whelen Engineering
Charlestown, NH

Dear Mr. Froling:

In response to your request on behalf of Whelen Engineering for certification of eight biomass (wood pellet or precision dry wood chips) boilers located at the Whelen Engineering campus at 99 Cedar Road in Charlestown, NH as an aggregated Class I thermal renewable energy source, the New Hampshire Department of Environmental Services (DES) recommends that the Public Utilities Commission (PUC) grant approval to Whelen Engineering as a Class I thermal renewable energy source eligible to generate renewable energy certificates. A summary of the facility description, DES's review of best management practices (BMP) requirements, and a recommendation for approval are presented below.

Facility Description

Facility Name: Whelen Engineering
Location: 99 Cedar Road in Charlestown, NH
Primary Fuel: wood pellets or precision dry wood chips
Net Maximum Output: 500,000 BTU/hr per boiler

Emissions

By definition, *"Thermal biomass renewable energy technologies"*, requires units rated less than 3 MMBtu/hr gross heat input to meet best management practices (BMP) as established by DES for control of particulate matter (PM) and nitrogen oxides (NOx) emissions. DES herein establishes BMP as conducting boiler tune-ups annually and conducting combustion efficiency testing initially and annually demonstrating results equal to or greater than 99%.

BMP Confirmation

Test data for carbon monoxide (CO) and carbon dioxide (CO_2) concentrations in the exhaust gas were used to determine combustion efficiency using the following equation:

$CE(\%) = 100 \times CO_2 / (CO_2 + CO)$

Where:

CE = combustion efficiency

CO_2 = % by volume of carbon dioxide in the flue gas, and

CO = % by volume of carbon monoxide in the flue gas.

The results of the initial tests indicate that the combustion efficiency meets the required 99%. DES anticipates that Whelen Engineering will be able to meet ongoing BMP annually.

Conclusion and Recommendation for Approval

DES believes that Whelen Engineering currently meets, and annually will meet, the requirements to be certified as a Class I - New Biomass thermal renewable energy source. DES recommends that the PUC certify Whelen Engineering as a Class I thermal renewable energy source eligible to generate thermal renewable energy certificates, on the condition that Whelen Engineering annually demonstrates that BMP continue to be met.

Please submit a copy of this letter with your completed application for renewable energy source eligibility to the PUC. If you have any questions, please contact me at joseph.fontaine@des.nh.gov or (603) 271-6794.

Sincerely

Joseph T. Fontaine
Program Manager
Air Resources Division

Wheelen 1 - Attachment 3-1

clark Sonic®

CSEM BTU/Energy Monitor

Energy Monitoring of Heating or Cooling Systems, 3/4" to 10" Pipe

DESCRIPTION

The CSEM is an economical energy flow monitor intended for applications in energy transfer and heating/cooling systems where energy use requires measurement.

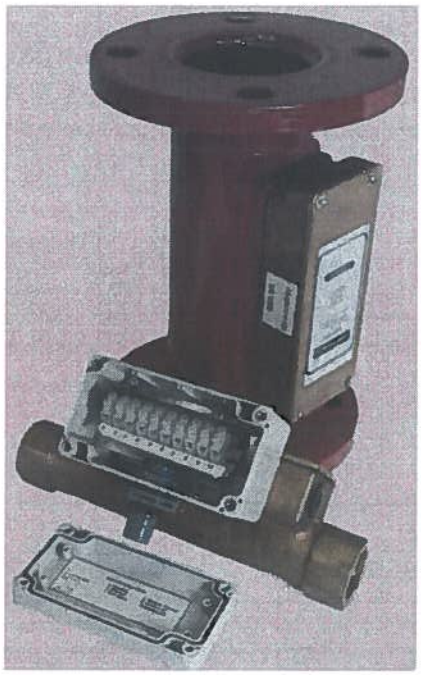

In heat exchange loops the CSEM internally calculates the energy gained or lost by the heat exchanger. The energy is calculated based on the the mass volume of liquid passing through the system and the difference in temperature between the supply and return lines. The volume of liquid is measured by means of a Clark ultrasonic flow transmitter. A RTD sensor built into the flowmeter (T_1) measures temperature at the meter. The remote temperature (T_2) is measured by means of a precision RTD sensor mounted in the return pipe.

A scaled pulse output is provided and can be configured to report volume flow rate, mass flow rate or unit of energy. Modbus 485 communications provides an interface with a building automation or monitoring system.

The unit contains non-volatile memory that records flow and energy, and is updated every ten minutes. However, when flow, mass or energy totals are read, the reported values are true current values; the last stored value is added to the current accumulated value when the applicable register is read.

The default medium for the CSEM is water. Other media consisting of water and a certain percentage of glycol up to 60% can be field configured.

APPLICATIONS

- **HEATING ONLY APPLICATION**
- **COOLING ONLY APPLICATION**
- **HEAT RECOVERY APPLICATIONS**
- **CONDENSATE RECOVERY APPLICATIONS**
- **EFFICIENCY MEASURING/VERIFICATION**

SPECIFICATIONS

TEMPERATURE MEASUREMENT

RTD integral to Flow Transmitter:
Sensor: 1000 Ohm, Class B, Platinum RTD Element (Alpha= 3.85)

Remote RTD Assembly: 1000 Ohm, Class B, Platinum RTD Element

Option 1 (3/4" & 1" pipe size): 1 RTD packaged in a 1/4" x 2.5" stainless steel sheath with 1/2" NPT brass adjustable compression fitting for mounting in a 1/2" branch of a 3/4" or 1" pipe tee; supplied with 10 ft of 3-wire RTD cable.

Option 2 (3/4" to 10" pipe size): Clark Spring-Loaded RTD Thermowell Assemblies with General Purpose Aluminum Connection Heads are designed for use with, and supplied with, 316 SS thermowells. This design allows 1/4" spring compression to ensure positive contact with the bottom of the thermowell.

Sheath Material & Diameter: 316 SS, 1/4" dia.
Element Connection: 3 wire, screw terminal
Connection to Energy Monitor: 10 ft connecting RTD cable supplied with each model (longer lengths available).
Head Mounting Fittings: 316 SS, 1/2" x 1/2" NPT hex nipple, 1" length
Head & Sheath Termonation: Aluminum screw cover head, 3/4" NPT conduit connection
Thermowell Material: 316L SS
Pipe Conection: 3/4" NPT
Models & Dimensions: See Table 1

Accuracy: Temperature difference used in energy calculation is obtained from a matched pair of RTD's calibrated at factory to report temperature difference to ±(0.1 + 0.002*T) Degs C.

Operating Differential Temperature Range Heating & Cooling:
2 to164°F (1.1°C to 91°C), minimum default factory set as 2°F, consult factory for different value.

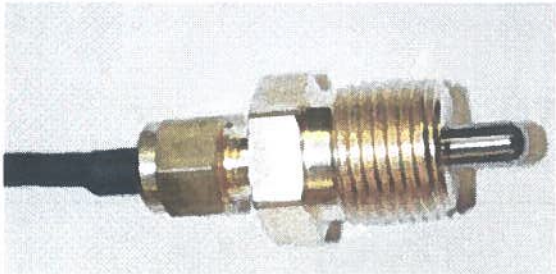

Remote Temperature RTD Option 1: Model 43-110 sheathed RTD with 1/2" NPT brass adjustable compression fitting for mounting in a 1/2" branch o f a 3/4"or 1" pipe tee. 10 ft Fixed length of RTD cable supplied.

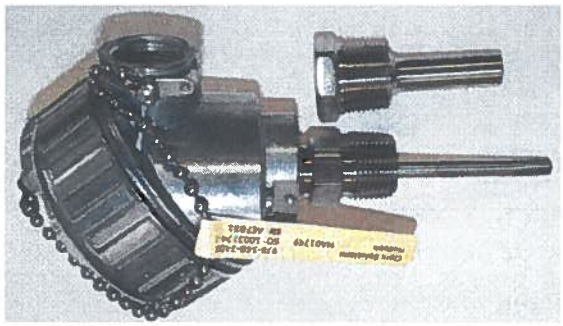

Remote Temperature RTD Option 2: Model19-(027, 028, 029) Sheathed RTD packaged with thermowell

Figure 1

Table 1

Remote RTD Model & Thermowell Dimension Chart				
Model	**For Pipe Sizes**	**See Figure**	**S**	**U**
43-110	Sheathed RTD with 1/2" NPT brass adjustable compression fitting for mounting in a 1/2" branch o f a 3/4"or 1" pipe tee. 10 ft Fixed length of RTD cable supplied.			
19-027	3/4", 1", 1-1/2" & 2"	1	-	-
19-028	3" & 4"	2	4"	2-1/2"
19-029	6" & 8"	2	6"	4-1/2"
19-030	10"	2	9"	7-1/2"

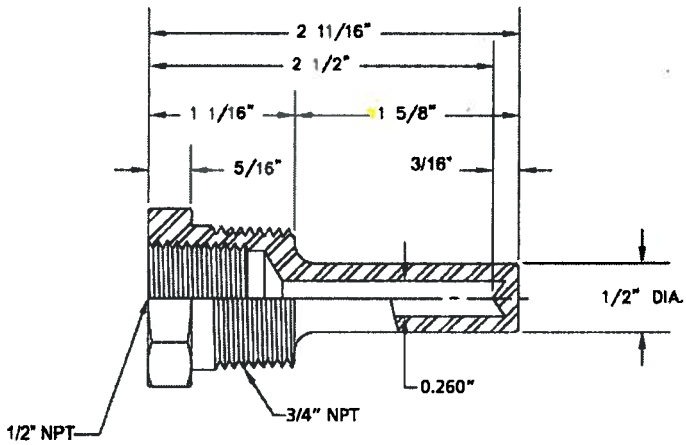

Figure 2

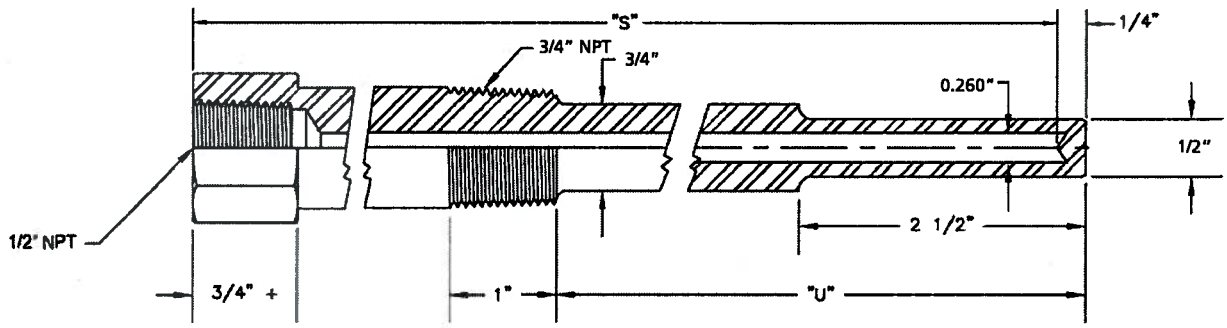

FLOW TRANSMITTER WITH RTD SENSOR & INTEGRATED ELECTRONICS FOR ENERGY CALCULATIONS

Clark Sonic ultrasonic flow transmitters are ideal for measurement of flow rates of acoustically conductive liquids including most clean liquids and many liquids with entrained solids. They are ideal for monitoring flow rate and temperature in heat exchange applications. CSEM flow transmitters are supplied with a built-in platinum 1000 Ohm RTD temperature sensor (T_1) to monitor the media temperature.

Main advantages include excellent long term stability, no pressure drop, broad fluid compatibility, high accuracy and low cost. Also, there are no moving parts.

The output of the transmitter is unaffected by changes in fluid temperature, density and viscosity as the flow calculation is independent of the speed of sound.

Wetted materials include ULTEM® encapsulated ultrasonic transducers with a choice of elastomer seals and Brass body material.

Packaged integral to the CSEM flow sensor are the related circuits for making energy calculations and for providing pulse output and Modbus RS 485 communications.

FLOW TRANSMITTER SPECIFICATIONS

GENERAL

Flow Range: Bi-directional, per "Standard Models" tables 2 & 3
Accuracy: ±0.75% of full scale
Media Oper. Temp. Range: -4 to 190°F (-20 to 87.8°C)
Ambient Oper. Temp. Range: -40 to 190°F (-40 to 87.8°C)
Response Time: 2 seconds
Viscosity Range: 0.2 to 150 cSt (0.2 to 150 mPas)
Liquid Density: 30.6 to 74.9 lb/cu.ft. (490 to 1200 kg/m³)
Max. Working Pressure:
3/4" to 2":250 PSI (17.2 bars)
3" to 10": PerASME 150 flange specification
Pipe Sizes: 3/4", 1", 1 1/2", 2", 3", 4", 6". 8", 10"
Pipe Connections:
See Model Tables 2 & 3
Sizes 3/4" to 2"- Female NPT or BSP
Size 3" to 10": ASME 150 Flange
Electrical Enclosure: Polycarbonate with gasketed cover and 1/2" Liquidtight non-metalic conduit connector
Enclosure Rating: NEMA 4 (IP 65)
Power Supply Voltage: 12 to 36 VDC
Current Consumption: <10 mA
Flow & Error Indication:
Green LED located on the wiring enclosure
Flashing- Making good measurements, flashes in proportion to flow rate
Off- No flow
Steady on- Flow measurement error

WETTED MATERIALS

Ultrasonic Transducers: ULTEM® Encapsulated
Seals: EPDM, Buna-N, Neoprene™, FKM, or other
Body Material:
3/4" to 2":Brass (UNS C83600)
3" to 10": Schedule 40, epoxy coated, carbon steel pipe

OUTPUT

Pulse Output: Can be factory set or field configured to report volume flow rate, mass flow rate or pulse per unit of energy. Output is either an optically isolated NPN transistor with maximum sinking capability to 50 mA from a voltage source of no more than 48 VDC or a voltage output (power supply voltage). Pulse duration is 1 ms when reporting flow rate and 10 ms when reporting unit of energy (consult factory for different pulse duration).
Wiring Connection: Via terminal strip (see wiring diagragm).
Models supplied with:
10 ft 3-conductor RTD cable
1 x 1/2" Liquidtight 90° non-metalic conduit connector for power, pulse output and RS485 cable entry to wiring enclosure
1 x PG-7 Strain relief connector for RTD cable entry to wiring enclosure

Table 2

STANDARD MODELS- 3/4" TO 2"

Model	Pipe Size/Thread Size	Full Scale Ranges & Vol. or Mass Flow Pulse Output (Dependent on Configuration) F.S. GPM Min.	Max.	P_g Pulses/gallon	M_{lb} Pulses/lb	F.S Liters/Min Min.	Max.	P_l Pulses/liter	M_{kg} Pulses/kg
CSEMB34	3/4" NPT or BSP	0.38	25	1200	150	1.50	100	300	300
CSEMB10	1.0" NPT or BSP	0.75	50	600	72	3.00	200	150	150
CSEMB15	1.50" NPT or BSP	1.20	80	360	45	4.50	300	96	96
CSEMB20	2.0" NPT or BSP	1.80	120	240	30	6.8	455	60	60

Table 3

Volume Flow(g/min)= 60 x Frequency/P_g Mass Flow(lbs/min)= 60 x Frequency/M_{lb}
Volume Flow(l/min)= 60 x Frequency/P_l Mass Flow(kg/min)= 60 x Frequency/M_{kg}

STANDARD MODELS- 3" TO 10"

Model	Pipe Size	Full Scale Ranges & Vol. or Mass Flow Pulse Output (Dependent on Configuration) F.S. GPM Min.	Max.	P_g Pulses/gallon	M_{lb} Pulses/lb	F.S Liters/Min Min.	Max.	P_l Pulses/liter	M_{kg} Pulses/kg
CSEMC3	3"	6	400	75	9	23	1500	20	20
CSEMC4	4"	7.5	500	60	7.2	29	1900	16	16
CSEMC6	6"	18	1200	25	3	68	4500	7	7
CSEMC8	8"	30	2000	15	1.8	114	7600	4	4
CSEMC10	10"	45	3000	10	1.2	165	11000	3	3

FIELD REPLACEABLE TRANSDUCER FOR 3" TO 10" SIZES

Volume Flow(g/min)= 60 x Frequency/P_g
Volume Flow(l/min)= 60 x Frequency/P_l
Mass Flow(lb/min)= 60 x Frequency/M_{lb}
Mass Flow(kg/min)= 60 x Frequency/M_{kg}

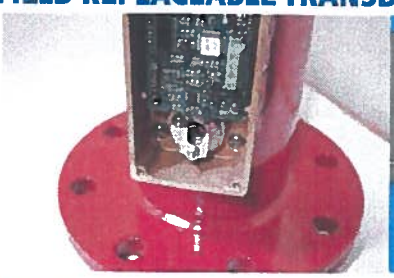

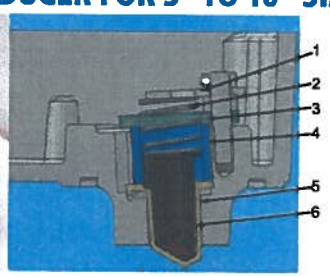

Transducer Components	
1	Spring Retainer
2	Spring
3	Clamp
4	Bushing
5	Drywell
6	Ultrasonic Transducer

Two opposing CSEMC ultrasonic transducers are inserted into fixed ULTEM® drywells and held in place with light spring force. A locating keyway in the drywell aids insertion and positioning of the transducers. In the event of field failure of a transducer, replacement is straightforward and can be accomplished without removing the pipe spool and shutting down the process.

The electrical PC board can also be field replaced. Calibration factor and other specific information are maintained at the factory for all transmitters shipped.

Energy Measurement:

T_1 RTD is located in the flow sensor

T_2 Remote RTD is installed in a return pipe.

Heating and cooling energy are both measured and totaled in separate registers in model CSEM. The values can be interrogated via the Modbus Master.

1) Heating Mode: $T_1 > T_2$
2) Cooling Mode: $T_2 > T_1$

The unit of energy pulse output functions in the absolute mode, indifferent as to whether in the heating or cooling mode.

System accuracy: EN1434-1, C 900.1, OIML R 75-1 Class 2 & 3 (see Table 4)

Security: Holographic tamper evident label seal with unique serial number provided for electrical enclosure cover. Seal must be broken to affix a jumper for commissioning

Modbus Operability:

Baud Rate: 9600 (default) or 19.2 KB/S
Parity: Selectable, None (default), Even, Odd
Slave Id: 01-255 (default is 02)
Function Codes: 03, 05 & 06 are supported
Exception Codes: 01, 02 & 03 are supported
Data types: Word, Double
Data is sent "Big Endian", i.e. most significant byte first.

Table 4 Accuracy Class Rating Per EN 1434-1 & OIML R 75-1

Percent FS	10.00	20.00	30.00	40.00	50.00	60.00	70.00	80.00	90.00	100.00
Delta T (°C)										
2.00										
2.60										
3.38										
4.39										
5.71										
7.43										
9.65										
12.55										
16.31										
21.21										
27.57										
35.84										
46.60										
60.58										

Class 2 Class 3

Flow and energy data updated every 2 seconds. Turn around time is less than 2 seconds.Since the data is updated every 2 seconds, reading data at intervals greater than the update time will ensure that current values will always be fresh.

Commissioning:

The CSEM communication and other parameters can be pre-configured and programmed at the factory. They can also be field programmed from the user's Modbus Master over the RS-485 network, or by Clark stand alone commissioning software via PC serial or USB port and a RS-485 converter model 43-119 (serial port) or USOPTL4-LS (USB port). 640 Ohm bus termination resistors can be jumper selected on the pcb. Commissioning software can be downloaded from our website, www.clarksol.com.

The software has additional functionality and enables the user to interrogate all registers at once to receive measured quantities. Also, all related units of measurement can be retrieved from the addressed slave meter. In addition, manual datalogging is possible.

About EN 1434-1 max. permissible error of complete heat meters

Class 2: $E = \pm(3+4\Delta\Theta_{min}/\Delta\Theta + 0.02q_p/q)$

Class 3: $E = \pm(4+4\Delta\Theta_{min}/\Delta\Theta + 0.05q_p/q)$

Where:

E= Max. permissible Error (%)

$\Delta\Theta_{min}$ = Lower Limit of Temperature Difference (2°C)

$\Delta\Theta$ = Temperature Difference between Supply & Return of the heat exchange circuit

q_p = Highest flow-rate at which energy meter shall function continuously without maximum permissible errors being exceeded (stated full scale value of CSEM)

q = Flow Rate

Note: Accuracy statements apply to meters with matched temperature probes provided as original equipment from factory.

Table 5- Read Data Registers

Variable	Register Number	# Registers	Function Code	Data Type	Description
FLOW RATE	40001	2	03	Double	RETURNS FLOW RATE IN SELECTED UNITS
ENERGY RATE	40003	2	03	Double	RETURNS ENERGY RATE IN SELECTED UNITS
MASS RATE	40005	2	03	Double	RETURNS MASS FLOW RATE IN SELECTED UNITS
FLOW TOTAL	40007	2	03	Double	RETURNS TOTAL FLOW IN SELECTED UNITS SINCE LAST RESET
HEATING TOTAL	40009	2	03	Double	RETURNS TOTAL HEAT ENERGY IN SELECTED UNITS SINCE LAST RESET
COOLING TOTAL	40011	2	03	Double	RETURNS TOTAL COOLING ENERGY IN SELECTED UNITS SINCE LAST RESET
MASS TOTAL	40013	2	03	Double	RETURNS TOTAL MASS IN SELECTED UNITS SINCE LAST RESET
LOCAL TEMP	40015	2	03	Double	RETURNS LOCAL TEMPERATURE IN SELECTED UNITS
REMOTE TEMP	40017	2	03	Double	RETURNS REMOTE TEMPERATURE IN SELECTED UNITS
DIFFERENTIAL TEMP	40019	2	03	Double	RETURNS DIFFERENTIAL TEMPERATURE IN SELECTED UNITS

Table 6- Setup Functions, Write Data Registers

Variable	Register Number	# Registers	Function Code	Data Type	Description
SET FLOW RATE UNITS	40101	1	06	WORD	UNITS OF FLOW RATE; 0 = G/M, 1 = L/M
SET ENERGY RATE UNITS	40102	1	06	WORD	UNITS OF ENERGY RATE; 3 = BTU/M, 4 = KBTU/M, 5 = KBTU/HR, 6 = KW
SET MASS FLOW RATE UNITS	40103	1	06	WORD	UNITS OF MASS RATE; 7 = LBS/MIN, 8 = KG/MIN
SET FLOW TOTAL UNITS	40104	1	06	WORD	FLOW TOTAL UNITS; 9 = GALS, 10 = LITERS, 11 = CUBIC METERS
SET ENERGY TOTAL UNITS	40105	1	06	WORD	ENERGY TOTAL UNITS; 12 = kBTU, 13 =W-HRS, 14 = KW-HRS
SET MASS TOTAL UNITS	40106	1	06	WORD	MASS UNITS; 15 = LBS, 16 = KG
SELECT PULSE OUTPUT	40107	1	06	WORD	SELECT ENERGY,FLOW,OR MASS AS PULSE OUTPUT; 0 = FLOW, 1 = ENERGY, 2 = MASS
SELECT TEMPERATURE UNITS	40108	1	06	WORD	SELECT DEG F OR DEG C; 0 = DEG F, 1 = DEG C
SELECT MEDIA TYPE	40109	1	06	WORD	0 =WATER, 1,(2) = ETHYLENE GLYCOL 92% (95.5%), 2(3) = PROPLENE GLYCOL 94% (96%)
SET % GLYCOL	40110	1	06	WORD	ENTER PERCENT ADDED , 10 TO 60
SET PULSE TYPE	40111	1	06	WORD	0 = UNIVERSAL; 2 = HEATING ONLY; 3 = COOLING ONLY

Table 7- Commissioning & Other Functions, Write Data Registers

Function	Register Number	# Registers	Function Code	Data Type	Description
SET SLAVE ID	40201	1	06	WORD	02 IS FACTORY SET 0 to 255; Can only be set when commissioning
BAUDRATE	40202	1	06	WORD	19.2 KB OR 9600 (DEFAULT) 0 = 9600, 1 = 19.2kb; Can only be set when commissioning
SET PARITY	40203	1	06	WORD	NONE, ODD, EVEN (DEFAULT) 0,1,2; Can only be set when commissioning
RESET FLOW TOTAL	00001	1	05	WORD	CLEARS TOTALIZED FLOW
RESET HEATING ENERGY TOTAL	00002	1	05	WORD	CLEARS TOTALIZED HEATING ENERGY (ONLY WITH COMMISSIONING JUMPER INSTALLED)
RESET COOLING ENERGY TOTAL	00003	1	05	WORD	CLEARS TOTALIZED COOLING ENERGY (ONLY WITH COMMISSIONING JUMPER INSTALLED)
RESET MASS TOTAL	00004	1	05	WORD	CLEARS TOTALIZED MASS (ONLY WITH COMMISSIONING JUMPER INSTALLED)

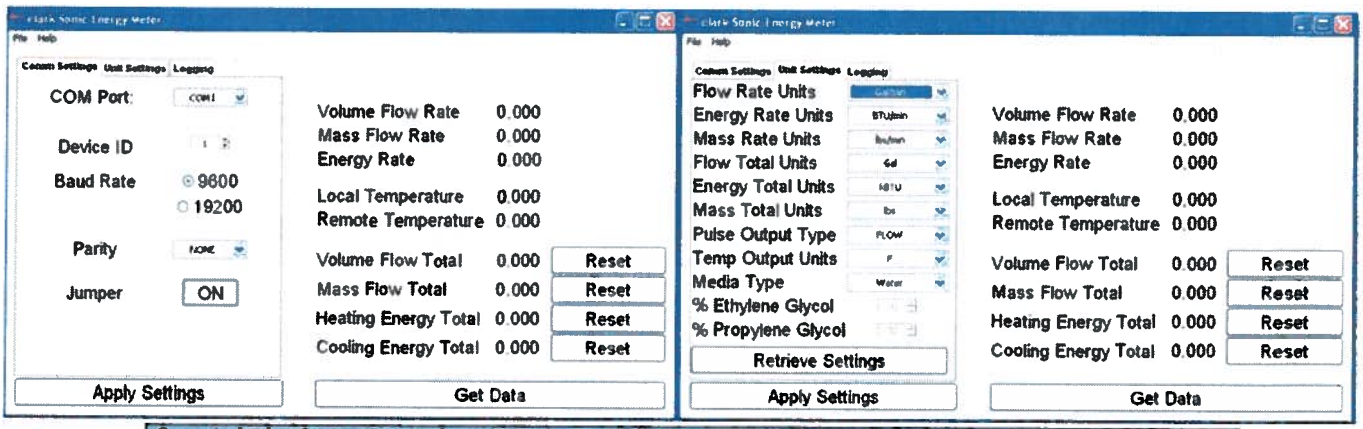

Commissioning from a personal computer is straightforward with Clark commissioning software. Download from our website at www.clarksol.com. Requires P/N 43-119 or USOPTL4-LS , RS 485 converter.

DIMENSIONS

3-10" Schedule 40 Carbon Steel Pipe, ASME 150 Flange

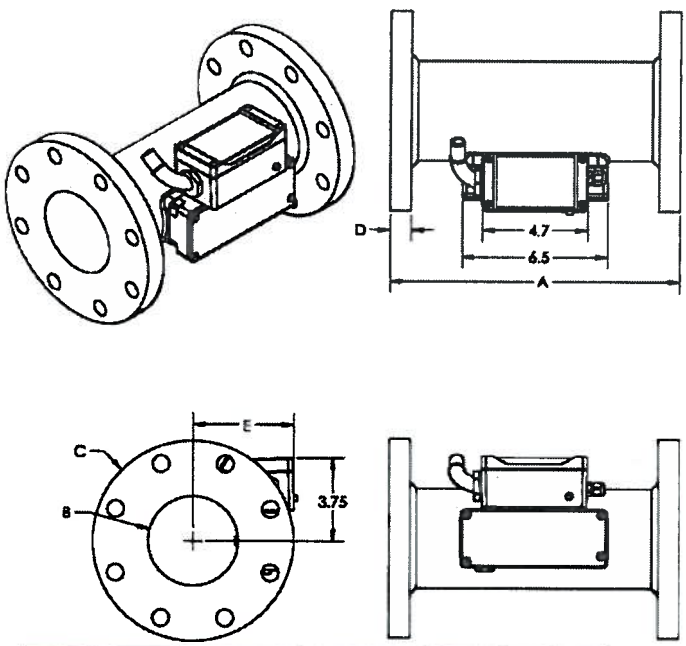

Pipe sizes 3/4" to 2"

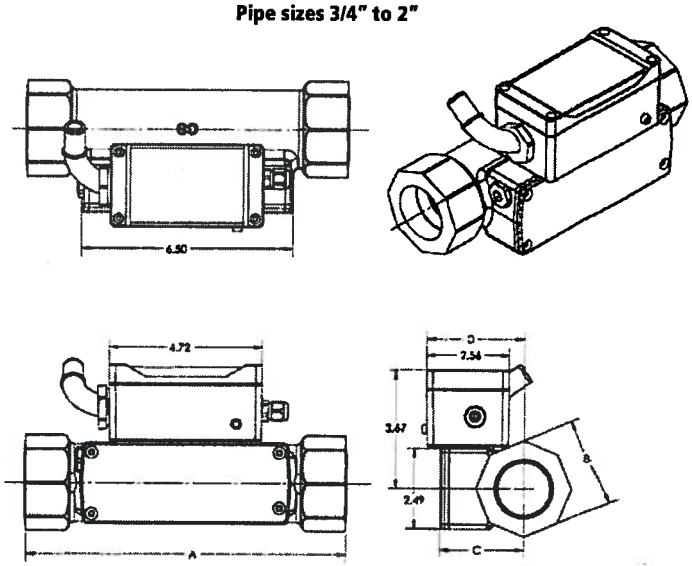

Meter Size ID	Table 8 Dimensions (Inches)							
	A	B	C	D	E	F	Bolt Circle Dia.	Number of Holes - Dia.
3"	11.00	3.07	7.50	0.74	4.05	3.75	6.00	4 - 0.75
4"	13.00	4.03	9.00	.94	4.50	3.75	7.50	8 - 0.75
6"	16.00	3.06	11.00	1.00	5.60	3.75	9.50	8 - 0.88
8"	18.00	7.98	13.50	1.12	6.62	3.75	11.75	8 - 0.88
10"	22.00	10.02	16.00	1.19	7.69	3.75	14.25	12 - 1.0

Table 9 Dimensions (Inches)				
Size	A	B	C	D
3/4" & 1"	9.15	1.62	2.28	2.63
1-1/2" & 2"	9.85	2.75	2.59	3.02

ELECTRICAL

RS-485: 3-conductor cable
- Red: TXD1 (D1)
- Black: TXD0 (D0)
- Green or Clear: GND

Power & NPN TransistorOut:
- 4-conductor cable
- Red (+): V_{in} 12 to 30 VDC
- Black (-): V_{in} Return
- Green : OPTO NPN E
- White: OPTO NPN C

Terminal Connections

1 -	5 RTD-Red	8 Modbus Ground
2 +12-36 VDC	6 RTD-Red	9 Modbus D1
3 C	7 RTD-White	10 Modbus DO
4 E		

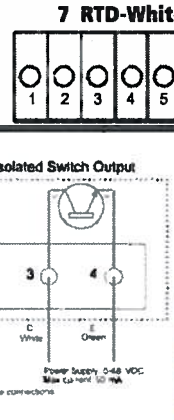

Note: NPN Opto-isolated switch output (Order code I) and Vo Powered Pulse Output (order code V) are jumper selected at the factory.

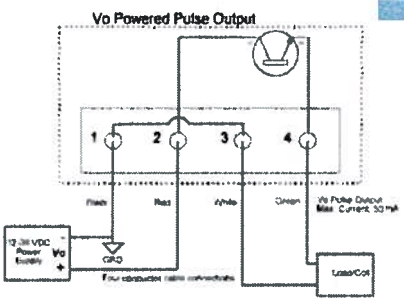

Optional RS-485 Converter for Commissioning from a PC:
- Model 43-119: Use with comm port
- Model USOPTL4-LS: Use with USB port
  - PC End: DB9 Female
  - RS-485 End: Terminal Block

Terminal Block Connections to CS-EM:
- Black: TD(A)-
- Red: TD(B)+
- Clear or Green: Gnd

ORDERING INFORMATION

Table 10

3/4" TO 2" ORDERING INFORMATION

ORDER NUMBER (ABCDE)

Example: CSEMB10-19-027NEI1

A	B	C	D	E		
Flow transmitter Model W/Remote Temp Probe	Pipe Thread	Transducer Seal	Pulse Out Config.	1= Default Config. #1	2= Default Config. #2	3= Default
See Table 2 for flow Transmitter Model detail See Table 1 for temperature probe detail CSEMB34-43-110 CSEMB34-19-027 CSEMB10-43-110 CSEMB10-19-027 CSEMB15-19-027 CSEMB20-19-027	N= Female NPT B=Female British Standard Pipe (G)	E= EPDM B= Buna-N N= Neo-prene® V= FKM	I=Opto-Isolated NPN V= Voltage Pulse	Pulse Output: 1 pulse = 1000 Btu (1 KBtu) Pulse Type: Universal Media: Water, no glycol Volume Flow Rate Units: Gallons/Min Mass Flow Rate Units: Lbs/Min Volume Total Units: Gallons Mass Total Units: Lbs Energy Rate Units: kBtu/Min Energy Total Units: kBtu Temperature Units: °F Min. Temp. Differential: 2°F Baud Rate: 9600 Parity: None Slave ID: 02	Pulse Output: 1 pulse = 1 KW-Hr Pulse Type: Universal Media: Water, no glycol Volume Flow Rate Units: Liters/Min Mass Flow Rate Units: KG/Min Volume Total Units: Liters Mass Total Units: KG Energy Rate Units: KW Energy Total Units: KW-Hrs Temperature Units: °C Min. Temp. Differential: 1.1°C Baud Rate: 9600 Parity: None Slave ID: 02	User Specified, user to fill out and submit configuration sheet (last page of this bulletin

Table 11

3" TO 10" ORDERING INFORMATION

ORDER NUMBER (ABCD)

Example: CSEMC4-19-028EI2

ULTEM® is a registered trademark of The General Electric Company

A	B	C	D		
Flow transmitter Model W/Remote Temp Probe	Transducer Seal	Pulse Out Config.	1= Default Config. #1	2= Default Config. #2	3= Default Config. #3
See Table 3 for flow Transmitter Model detail See Table 1 for temperature probe detail CSEMC3-19-028 CSEMC4-19-028 CSEMC6-19-029 CSEMC8-19-029 CSEMC10-19-030	E= EPDM B= Buna-N N= Neoprene® V= FKM	I=Opto-Isolated NPN V= Voltage Pulse	Pulse Output: 1 pulse = 1000 Btu (1 KBtu) Pulse Type: Universal Media: Water, no glycol Volume Flow Rate Units: Gallons/Min Mass Flow Rate Units: Lbs/Min Volume Total Units: Gallons Mass Total Units: Lbs Energy Rate Units: kBtu/Min Energy Total Units: kBtu Temperature Units: °F Min. Temp. Differential: 2°F Baud Rate: 9600 Parity: None Slave ID: 02	Pulse Output: 1 pulse = 1 KW-Hr Pulse Type: Universal Media: Water, no glycol Volume Flow Rate Units: Liters/Min Mass Flow Rate Units: KG/Min Volume Total Units: Liters Mass Total Units: KG Energy Rate Units: KW Energy Total Units: KW-Hrs Temperature Units: °C Min. Temp. Differential: 1.1°C Baud Rate: 9600 Parity: None Slave ID: 02	User Specified, user to fill out and submit configuration sheet (last page of this bulletin

Accessory	Description
RT-3-502	3-conductor RTD cable, 22 guage stranded tinned, PVC insulation, red, red, white. Specify Length.
M2244801	3-conductor shielded plenum wire, 22 AWG, PVC. Specify Length.

Accessory	Description
M2244802	4-conductor shielded plenum wire, 22 AWG, PVC . Specify Length.
43-119	RS-485 converter for commissioning from a PC Comm Port
USOPTL4-LS	RS-485 converter for commissioning from a PC USB Port

Instruments

Series 440 Programmable RTD Temperature Transmitter Specifications

Resistance Thermometer Input (RTD)

TYPE	MEASUREMENT RANGE	MINIMUM RANGE
Pt100 (α = 0.003 85 °C^{-1})	(-200 to 650) °C [-328 to 1202] °F	10 °C [18 °F]
Connection Type	2 or 3 wire connection cable resistance compensation possible in the 2 wire system (0 to 20) Ω	
Sensor cable resistance	maximum 11 Ω per cable	
Sensor current	≤ 0.6 mA	

Output (Analog)

Output signal	(4 to 20) mA or (20 to 4) mA
Transmission as	Temperature linear
Maximum load	($V_{power\ supply}$ - 10 V) / 0.023 A (current output)
Digital filter 1st degree	(0 to 8) s
Induced current required	≤ 3.5 mA
Current limit	≤ 23 mA
Switch on delay	4 s (during power 1_a = 3.8 mA)
Electronic response time	1 s

Failure Signal (fault monitoring)

Undershooting measurement range	Decrease to 3.8 mA
Exceeding measurement range	Increase to 20.5 mA
Sensor breakage/short circuit	≤ 3.6 mA or ≥ 21.0 mA

Electronic Connection

Power supply	U_b = (10 to 35) V dc, polarity protected
Allowable ripple	U_{ss} ≤ 5 V at U_b ≥ 13 V, f_{max} = 1 kHz

Resistance Thermometer Accuracy (RTD)

TYPE	MEASUREMENT ACCURACY
Pt100	0.2 °C or 0.08% [1]
Reference conditions	Calibration temperature (23 ± 5) °C [73 ± 9] °F

General Accuracy

Influence of power supply	± 0.01%/V deviation from 24 V [2]
Load influence	± 0.02%/100 Ω [2]
Temperature drift	T_d = ± (15 ppm/°C × (range end value + 200) + 50 ppm/°C × measurement range) × $\Delta\vartheta$ $\Delta\vartheta$ = deviation of the ambient temperature according to the reference condition
Long term stability	≤ 0.1 °C/year [3] or ≤ 0.05%/year [1][3]

[1] % is related to the adjusted measurement range (the value to be applied is the greater)
[2] All data is related to a measurement end value of 20 mA
[3] Under reference conditions

ATTACHMENT 3-2 AND 3-4

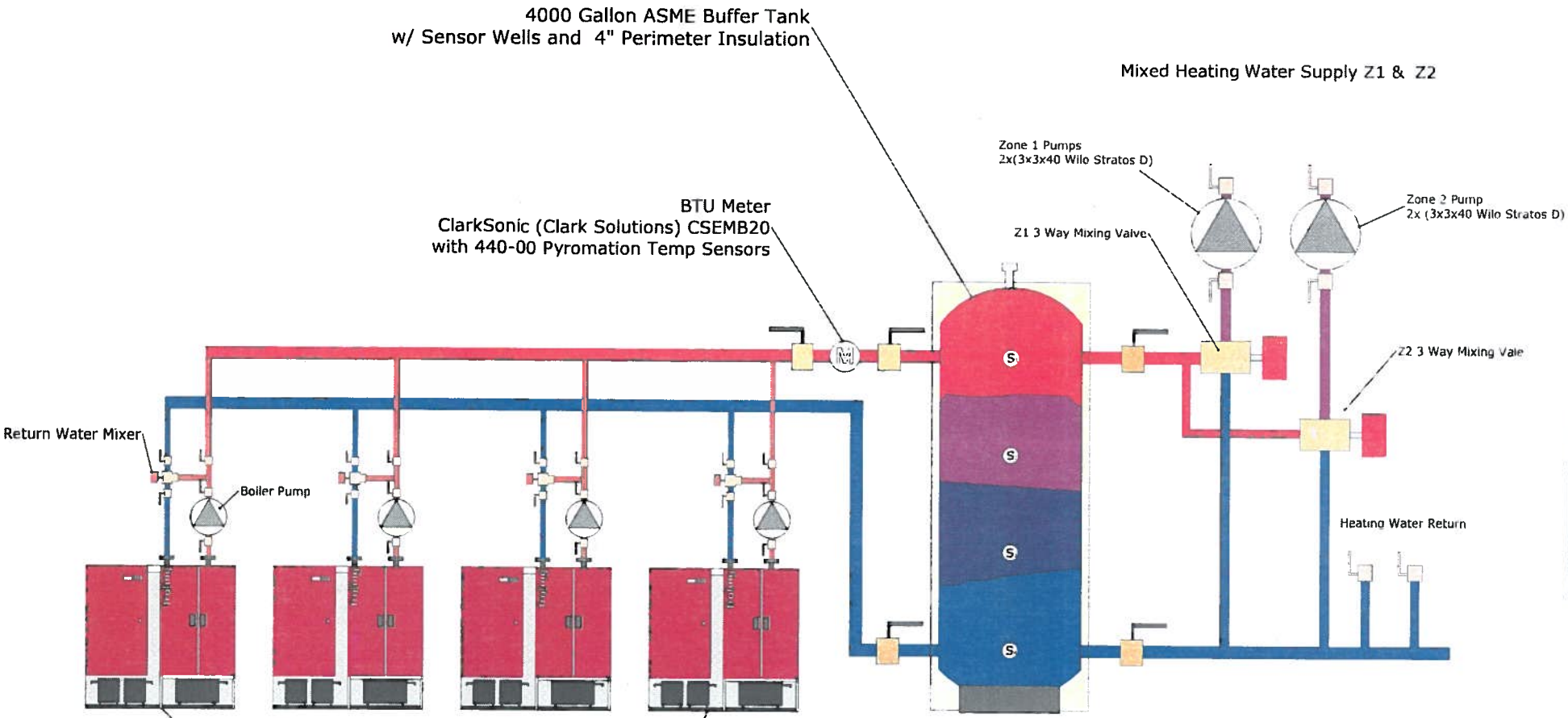

Simplified Mechanical Schematic; Not shown are:
Venting, expansion equipment, pressure relief and controls.
Piping Systems: Welded and Victaulic
Insulation: 1.5" FG on all pipes, 4" FG on tanks
PVC Jackets and fittings on all Piping and Fittings
Monitoing: DCM Logic, Web Based Boiler Browser
Installation: Froling Energy
Design: Froling Energy
Engineering Froling Energy and OES

Drawn By M. D. Froling

WHELEN 1 - ATTACHMENT 3-3

January 2st, 2016

Adam Kohler, PE
306 Hall Road
Barrington, NH 03825

Mr. Matt Dolloph
Whelen Engineering
99 Ceda Road
Charlestown, NH 03603

Dear Mr. Dolloph,

I am writing in reference to the BTU meter installed on the biomass heating system at Whelen Engineering Building 1. On June 2nd, 2015 I visited the site and reviewed the installation of the BTU meter.

Based on my field review, I believe that the BTU meter is installed per the manufacturer's recommendations and per the requirements of PUC 2506.04.

I can be reached at 603-969-6459 if you have any questions.

Sincerely,

Adam S. Kohler, PE

STATE OF NEW HAMPSHIRE
ADAM S. KOHLER
No. 12681
LICENSED
PROFESSIONAL ENGINEER

WHELEN 1 - ATTACHMENT 3-5

Whelen Engineering Photos of BTU Meter Equipment at Building 1

BUILDING 1 BTU METER with built in temperature sensor

BUILDING 1: Return Line Temperature Sensor